Low-Voltage LDO Regulators Power Portable Gear

By Ashok Bindra, Editor, *Power Electronics Technology*

Prompted to efficiently serve the stringent real estate and power needs of growing wireless handsets, PDAs, and other handheld electronic products, suppliers of low-voltage low dropout (LDO) linear regulators are racing to deliver high-performance LDOs in smaller packages with excellent load transient response and stability. Additionally, LDOs are being tailored to offer better noise performance with the ability to handle voltages at 1.2 V or below. The number of low-voltage LDO suppliers is increasing to meet the power demands of new generation microprocessors, DSPs and ASICs used in these applications. Concurrently, the shrinking space in these battery-powered products is forcing manufacturers to pack two or more low-voltage LDOs in the same or an improved package.

Consequently, these low-voltage LDO linear regulators are becoming attractive options to power low-voltage ICs in these applications, giving designers the option to implement a variety of power modes to minimize power consumption and maximize battery life. Thus, it is not surprising to see the supplier list on the rise, giving designers many options to work with. Carefully combining most favorable electrical and mechanical parameters, lately several manufacturers have added new members to expand their existing product portfolio. This gives designers a new line of LDOs that bring an optimal combination of low dropout voltage, quiescent current, transient response, noise and ripple rejection, shutdown mode, and external capacitor requirements. Moreover, these attractive characteristics are being packed in miniature packages that are pertinent to the requirements of space-constrained, battery-operated electronic gadgets.

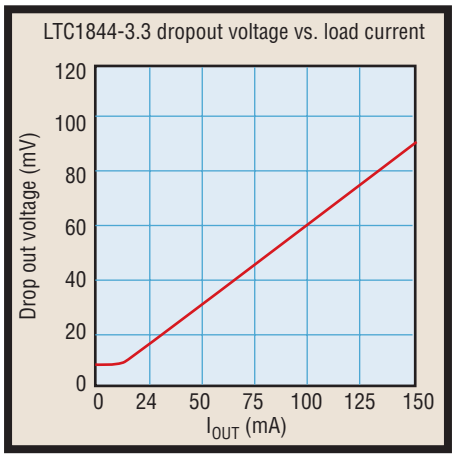

Fig. 1. *LTC1844's dropout is very low at 150-mA output current.*

Very Low Dropout

There is clearly a trend toward low Vin and very low dropout in many handheld applications, asserts Linear Technology's product marketing manager Tony Armstrong. Accordingly, designers at Linear Technology are planning to go as low as 1 V while maintaining the very low dropout performance, adds Armstrong. To serve the needs of designers, Linear Technology has recently released a very low dropout (VLDO) micropower linear regulator that can deliver as much as 150 mA of continuous output current from a ThinSOT package. The LTC1844 can operate from input voltage as low as 1.6 V, making it suitable for single cell Li-ion, multicell Alkaline or NiMH applications. It is available with an adjustable output or with fixed outputs ranging from 1.5 V to 3.3 V. At 50 mA of continuous output current, dropout voltage is only 30 mV, rising to 90-mV at 150 mA (Fig.1). This VLDO voltage enables the LTC1844 to regulate over the very small voltage differentials frequently found in handheld applications. It maintains an output voltage accuracy of $\pm$1.75% over the full temperature, voltage, and current ranges. Furthermore, with a low-profile (<1-mm) ThinSOT package, and tiny external 1-mF ceramic capacitors, it provides a compact footprint desired in space-constrained applications. LTC1844's supply current is only 40 mA (operating) and 10 nA in shutdown mode.

The LTC1844's low output noise of 30 μV_{RMS} (over a 10-Hz to 100-kHz bandwidth) makes it ideal for noise-sensitive applications. Internal protection circuitry includes reverse-battery protection, current limiting, thermal limiting, and reverse-current protection, to provide enhanced reliability and ease of design. Meanwhile, efforts are underway to combine proprietary design with in-house CMOS and bipolar processes to further raise the performance bar on these devices.

Likewise, Texas Instruments has readied a cap-free, low-noise, low-voltage LDO with reverse current protection and high accuracy in SOT-23 package for portable applications up to 400 mA. Offering high integration and low dropout for noise-sensitive applications with reverse leakage current protection, the new LDOs— TPS731xx, TPS732xx and TPS736xx families—are suitable for 150 mA, 250 mA and 400 mA applications such as PDAs, electronic game consoles, wireless LAN cards, notebook computers, and digital cameras. In addition, they provide rapid load-transient response and stability with or without an additional out-

put capacitor. According to TI's product manager Ray Crampton, the fast response of 5 µs or less is inherent in the topology (Fig. 2). To extend battery life and system runtimes, the current consumption is under 1 µA when the LDOs are in shutdown mode. Other key features include 30-mV typical ultralow dropout voltage, 30-µV_{RMS} typical noise (10 Hz to 100 kHz), 1% accuracy over line, load, and temperature variation, thermal shutdown and current limit protection. However, over the temperature range of -40°C to +125°C, the maximum dropout voltage is 100 mV.

The input range for the TPS731xx, TPS732xx and TPS736xx families is 1.8 V to 5.5 V, while the output range is 1.2 V to 5.5 V. The output voltage is adjustable with an external resistor. While the current three LDO families come in 5-pin SOT-23, TI is also considering higher power packages for future LDOs with much higher output current capability. Like Linear, TI is also preparing to deliver such devices with input and output voltages approaching 1 V and below. Chip-scale and QFN packages are also on TI's roadmap.

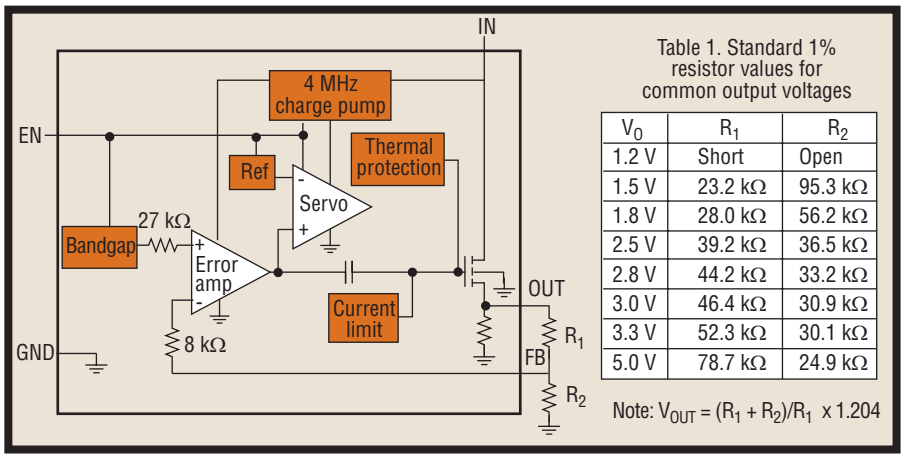

Table 1. Standard 1% resistor values for common output voltages

V_O	R_1	R_2
1.2 V	Short	Open
1.5 V	23.2 kΩ	95.3 kΩ
1.8 V	28.0 kΩ	56.2 kΩ
2.5 V	39.2 kΩ	36.5 kΩ
2.8 V	44.2 kΩ	33.2 kΩ
3.0 V	46.4 kΩ	30.9 kΩ
3.3 V	52.3 kΩ	30.1 kΩ
5.0 V	78.7 kΩ	24.9 kΩ

Note: $V_{OUT} = (R_1 + R_2)/R_1 \times 1.204$

Fig. 2. *TI's cap-free low-noise LDO regulator with fast transient response offers reverse current protection.*

Exploiting CMOS Process

National Semiconductor has transitioned from bipolar to CMOS process to deliver a range of low-voltage LDO regulators into this marketplace, according to senior marketing manager John Guyatt. It's latest entry, LP3992, is a micropower 1.5-V CMOS voltage regulator with shutdown control. The LP3992 is designed to meet the requirements of portable battery-powered systems providing an accurate output voltage, low noise and low-quiescent current. Battery life will be prolonged by the ability of the LP3992 to provide a 1.5 V output from the low input voltage of 1.9 V. Additionally, as per the datasheet, when switched to a shutdown mode via a logic signal at the shutdown pin, the power consumption is reduced to virtually zero. Other important features include short-circuit and thermal-shutdown protection, stable operation with space-saving ceramic capacitors as small as 1 µF, and -40°C to 125°C temperature range. Housed in a SOT23-5 package, the input voltage range for the unit is 1.9 V to 5.2 V with 1.5V ±0.09V output voltage. It guarantees 30-mA output current and low output voltage noise of 300 µV_{RMS} and provides fast turn-on and turn-off time.

Advanced Analogic Technologies, Fairchild Semiconductor, Micrel Semiconductor, Siliconix Inc. and Sipex are among others in this fray. Advanced Analogic Technologies, for instance, has added a new member to its NanoPower line of low-voltage CMOS LDOs. The newest AAT3223 is a 250-mA LDO linear regulator featuring an extremely low quiescent current 1.1 µA for power-sensitive portable applications. It also features an integrated PowerOK function that monitors the LDO output voltage and alerts the system when the output falls out of regulation. It offers a power-conserving enable pin, which when pulled low, puts the LDO into a shutdown mode to extend battery life. Typical dropout voltage is 190 mV at 100 mA output current, while the fixed output voltage is in the 1.8 V to 3.3 V range.

Another backer of CMOS is Fairchild Semiconductor. Like others, it has recently released FAN25xx low-voltage CMOS LDOs with fixed or adjustable output voltage capability with bells and whistles such as 180-mA load current, delayed power good output (open drain) and 1% output accuracy with excellent line and load regulation. An external bypass capacitor provides ultralow noise operation. Plus, these low-voltage LDOs implement both thermal shutdown and short circuit protection, and provide a stable output with a 1µF, low ESR capacitor. While FAN2558 is a fixed-output device with power good output, FAN2559 is a low noise version. Available standard output voltages are 1 V, 1.2 V, 1.3 V, 1.5 V and 1.8 V. Custom output voltage options are also available. Package choice includes 5-Lead SOT-23, 6-Lead SOT-23 and 2-mm × 2 mm MLP-6 packages.

Aiming to win more LDO sockets in portable gadgets, Vishay Siliconix has readied a pair of 300-mA low-noise, LDO regulators in 3-mm × 3-mm PowerPAK MLP33. A low ground current and 250-mV dropout at 300-mA current lends the Si91871 and Si91872 for low-voltage, battery-operated power systems. Designed to maintain regulation while delivering 400-mA peak output current in applications with high surge currents at turn-on, the Si91871 and Si91872 are available in a range of 14 fixed-output voltage options from 1.2 V to 5 V. Both devices feature 1.5% guaranteed output-voltage accuracy, a startup time of 60 µs and a transient response of ±30 µs. Integrated short-circuit and thermal protection ensures reliable operation, and reverse battery-protection limits reverse-current flow to a 1-µA maximum shutdown current. When no output

is required, digital circuitry shuts off the device to save power. Because the Si91871 is especially suited for sensitive RF receiver or audio amplifier environments, it comes with an external noise bypass capacitor to reduce output noise to 30 µV(rms). The Si91872 provides an out-of-regulation error flag. To give designers a flexible choice of magnetic components, the pair may be used with low-ESR ceramic or tantalum capacitors, according to Siliconix.

Siliconix is also prepping a dual LDO version that will offer two low-noise, low-voltage regulated outputs from a package that traditionally houses a single device. Obviously, the pin count will go to 10 pins. Slated for introduction early next year, the input range for this device is expected to be around 2.2 V to 5 V with outputs in the 1.2-V to 5-V range. While one output will be rated at 150 mA, the other will offer 300 mA. Accuracy, low-noise and transient-response specs will be maintained.

Supporting an input voltage range of 1.5 V to 6 V, with outputs down to as low as 0.9 V, Micrel Semiconductor is touting its newest micropower LDO regulator MIC5238 for use in battery-operated portable systems. The device is the latest addition to its line of IttyBitty™ SOT-23-5 LDO regulators featuring uCap capability, which allows a choice of either ceramic or tantalum output capacitors. Tailored to operate in either a single- or a dual-supply mode, the MIC5238's bias current is as low as 23 µA, while it can furnish output current up to 150 mA. This low-voltage LDO is rated to offer an output accuracy of ±2% over the temperature range. For applications that require a negative rail, Micrel has readied a µCap 100 mA negative regulator in a miniature SOT-23-5 package. With initial accuracy better than 2%, the MIC5271 sinks 100 mA of output current at very low dropout voltage—maximum of 600 mV at 100 mA of output current. It is optimized to work with low-value, low-cost ceramic capacitors. Consequently, the output typically requires only a 1-µF capacitance for stability. The MIC5271 also includes a TTL-compatible enable pin, allowing the user to put the part into a zero-current off-mode. Its output adjustable version can provide negative output down to -1.2 V. **PETech**

Advanced Analogic Technology; www.analogictech.com
CIRCLE 350 on Reader Service Card
Fairchild Semiconductor; www.fairchildsemi.com
CIRCLE 351 on Reader Service Card
Linear Technology Corp; www.linear.com
CIRCLE 352 on Reader Service Card
Micrel Semiconductor; www.micrel.com
CIRCLE 353 on Reader Service Card
National Semiconductor; www.national.com;
CIRCLE 354 on Reader Service Card
Sipex Corp.; www.sipex.com
CIRCLE 355 on Reader Service Card
Texas Instruments Inc.; www.ti.com
CIRCLE 356 on Reader Service Card
Vishay Siliconix; www.vishay.com
CIRCLE 357 on Reader Service Card

LEGAL NOTICE
U.S. POSTAL SERVICE STATEMENT OF OWNERSHIP, MANAGEMENT, AND CIRCULATION
(Required by Title 39, United States Code 3685)

1. Publication title: Power Electronics Technology (formerly PCIM Power Electronic Systems)
2. Publication number: USPS #0080-510; ISSN #1540-2800
3. Date of filing: 09/24/2003
4. Frequency of issue: Monthly
5. No. of issues published annually: 12
6. Annual subscription price: Free to qualified
7. Location of known office of publication: PRIMEDIA Business Magazines & Media, 9800 Metcalf Ave., Overland Park, KS 66212-2216 (Johnson County)
8. Location of headquarters or general business office of publisher: PRIMEDIA Business Magazines & Media, 9800 Metcalf Ave., Overland Park, KS 66212-2216 (Johnson County)
9. Full names and addresses of publisher, editor, and managing editor: **Publisher:** Barry LeCerf, 9800 Metcalf Ave., Overland Park, KS 66212-2216 (Johnson County); **Editor:Ashok Bindra**, 9800 Metcalf Ave., Overland Park, KS 66212-2216 (Johnson County); **Managing Editor:** Emily Saarela, 9800 Metcalf Ave., Overland Park, KS 66212-2216 (Johnson County).
10. The owner is PRIMEDIA Inc., 745 Fifth Ave., New York, NY, 10151 USA
11. Known bondholders, mortgagees, and other security holders owning or holding 1 percent or more of total amount of bonds, mortgages or other securities: None
12. Not applicable
13. Publication title: Power Electronics Technology
14. Issue date for circulation data: August 2003
15. Extent and nature of circulation:

	Average no. copies each issue during preceding 12 months	No. copies of single issue published nearest to filing date
A. Total no. copies printed (net press run)	38,725	39,179
B. Paid and/or requested circulation		
1. Paid/requested outside-county mail subscriptions as stated on Form 3541	36,633	36,688
2. Paid in-county subscriptions	0	0
3. Sales through dealers and carriers, street vendors, counter sales, and other non-USPS paid distribution	183	173
4. Other classes mailed through the USPS	0	0
C. Total paid and/or requested circulation	36,816	36,861
D. Free distribution by mail, carrier or other means samples, complimentary, and other free copies		
1. Outside county as stated on Form 3541	1,007	994
2. In county as stated on Form 3541	0	0
3. Other classes mailed through the USPS	0	0
E. Free distribution outside the mail	367	300
F. Total free distribution	1,374	1,294
G. Total distribution	38,190	38,155
H. Copies not distributed	535	1,024
I. Total	38,725	39,179
J. Percent paid and/or requested circulation	96.4%	96.6%

16. Publication of Statement of Ownership—Will be printed in the Nov. 2003 issue of this publication.
17. I certify that all information on this form is true and complete. Joan Roof, Audience Marketing Manager, 09/24/03